Sales Code: 237HFTC52SW

Barcode: 5056883730188

Brand: Halite

Description: Halite Caralis Satin White 500mm 1 Drawer Wall Hung Vanity Unit With Thin-Edge Basin



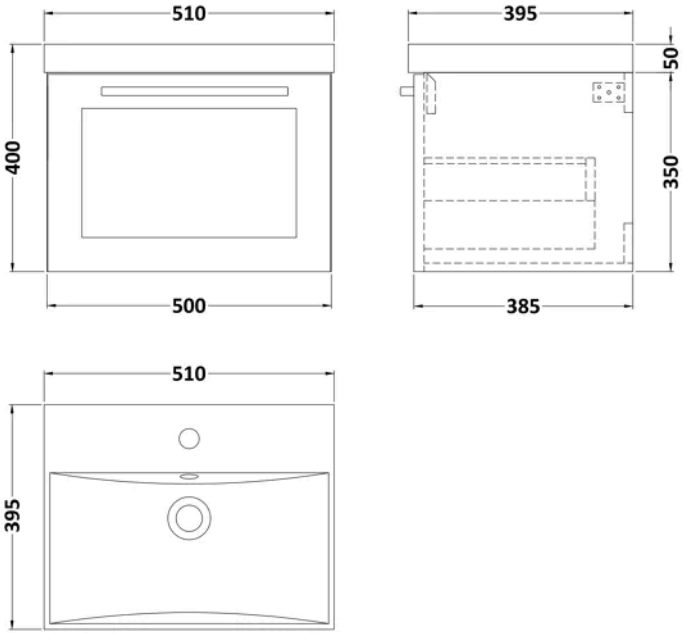

Product Dimensions

Product	400 x 510 x 395mm (H x W x D)
Packaged	390 x 540 x 405mm (H x W x D)
Nett Weight	21.18 kg
Packaged Weight	21.18 kg

Product Details

Country of Origin	China
Product Material	Polyurea,Pvc,Vitreous China
Colour/Finish	Satin White
Mount Type	Wall Hung
Style	Traditional
Construction Method	Cam & Wood Dowel
Ce Certified	Yes
Construction Type	Rigid
Declaration Of Performance	Yes
Drawer Type	80mm High Metal S/C Inc Gallery
Fascia Finish	PVC
Fsc Certified	Yes
Handles Included	Yes
Inner Bowl Height	125 mm
Material Thickness	18 mm
No. Drawers	1
No. Of Tapholes	1
Number Of Bowls	1
Overflow Cover Included	Yes
Overflow Included	Yes
Tap Included	No
Ukca Certified	Yes

© ROXOR Group

Sales Code: 237HFT50TEB **Barcode:** 5056883729991 **Brand:** Arley Pro **Description:** Halite 1 Tap Hole 500mm Thin Edge Ceramic Basin



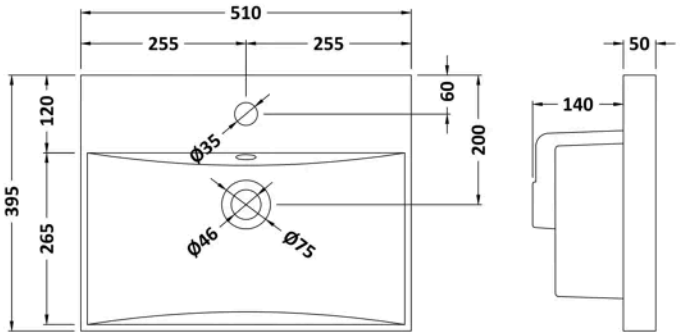

Product Dimensions

Product	190 x 510 x 395mm (H x W x D)
Packaged	190 x 530 x 415mm (H x W x D)
Nett Weight	9.5 kg
Packaged Weight	10 kg

Packaging Details

Box Qty	1

Product Details

Country of Origin	China
Product Material	Vitreous China
Colour/Finish	White
Style	Contemporary
Ce Certified	Yes
Inner Bowl Height	125 mm
No. Of Tapholes	1
Number Of Bowls	1
Overflow Included	Yes
Tap Included	No
Waste Included	No

© ROXOR Group

Sales Code: 237HFTC5WDWSW-W **Barcode:** 5056883729861 **Brand:** Halite **Description:** Halite Caralis 500mm Satin White 1 Drawer Wall Hung Vanity Unit



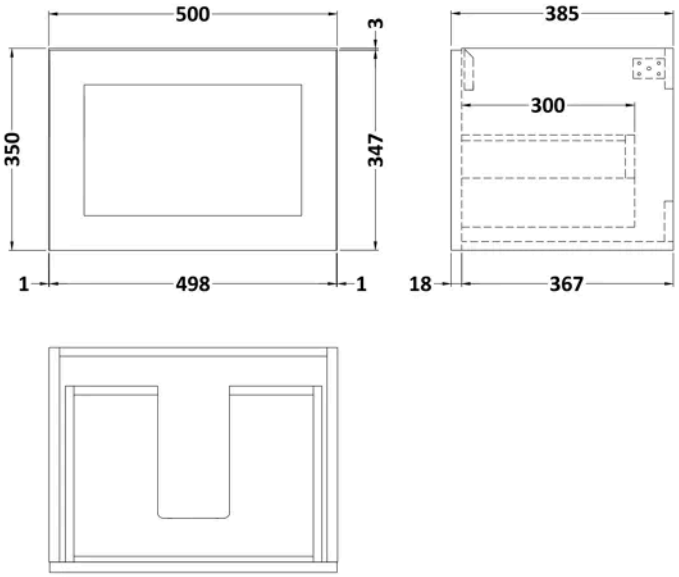

Product Dimensions

Product	350 x 500 x 385mm (H x W x D)
Packaged	410 x 560 x 450mm (H x W x D)
Nett Weight	10.6 kg
Packaged Weight	11.1 kg

Packaging Details

Box Qty	1

Product Details

Country of Origin	China
Product Material	Polyurea,Pvc
Colour/Finish	Satin White
Mount Type	Wall Hung
Style	Traditional
Construction Method	Cam & Wood Dowel
Ce Certified	Yes
Construction Type	Rigid
Drawer Type	80mm High Metal S/C Inc Gallery
Fascia Finish	PVC
Fsc Certified	Yes
Handles Included	No
Material Thickness	18 mm
No. Drawers	1
Ukca Certified	Yes
Waste Shroud	Yes

© ROXOR Group

Sales Code: 237HFTHD328CR **Barcode:** 5056883730010 **Brand:** Arley Pro **Description:** Halite 328mm Chrome D Handle (320mm Centres)



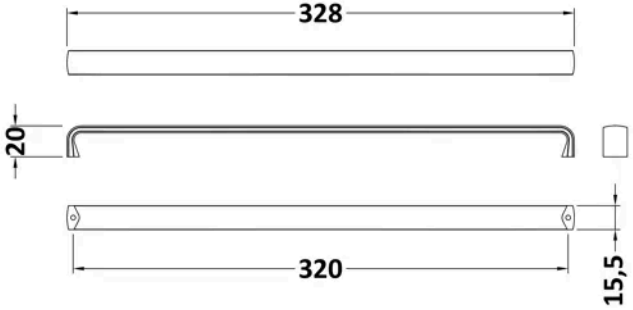

Product Dimensions

Product	20 x 328 x 16mm (H x W x D)
Packaged	20 x 40 x 320mm (H x W x D)
Nett Weight	0.16 kg
Packaged Weight	0.16 kg

Packaging Details

Box Qty	1
Label Size (mm)	50 x 100
Label Colour	White
Label Qty	1.0000

Product Details

Country of Origin	China
Product Material	Stainless Steel
Colour/Finish	Chrome
Style	Contemporary
Handle Type	D Shape
Fixings Included	Yes

© ROXOR Group