Sales Code: 237DIRWH500AB **Barcode:** 5056474591983 **Brand:** Arley Pro **Description:** Arley Direction 500mm Satin Blue 2 Door Wall Hung Basin Unit



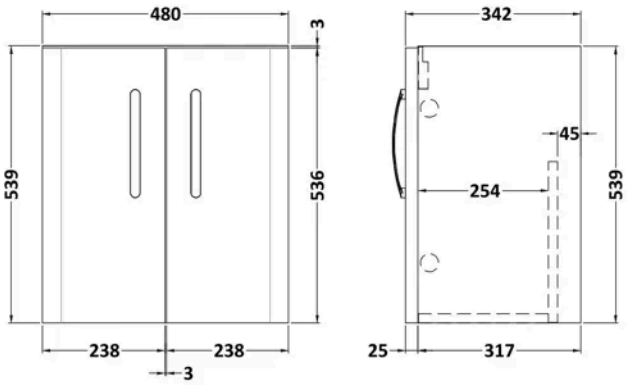

Product Dimensions

Product	540 x 480 x 317mm (H x W x D)
Packaged	560 x 500 x 340mm (H x W x D)
Nett Weight	16 kg
Packaged Weight	16 kg

Packaging Details

Box Qty	1

Product Details

Country of Origin	United Kingdom
Product Material	Mdf Painted Matt
Colour/Finish	Satin Blue
Mount Type	Wall Hung
Style	Contemporary
Handle Type	Strap
Construction Method	Cam & Wood Dowel
Construction Type	Rigid
Fascia Finish	Mdf Painted Matt
Handles Included	Yes
No. Doors	2
No. Shelves	1
Number Of Shelves	1

© ROXOR Group