Sales Code: 237DIRFL400GR **Barcode:** 5056474591891 **Brand:** Arley Pro **Description:** Arley Pro 400mm Gloss Grey Floor Standing Vanity Unit



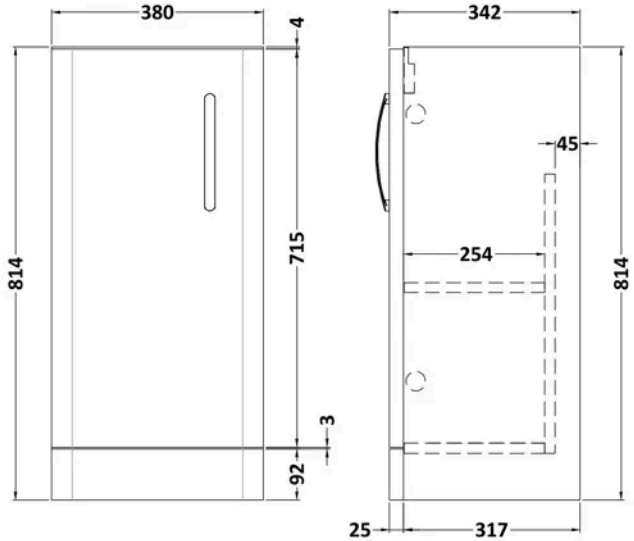

Product Dimensions

Product	814 x 380 x 317mm (H x W x D)
Packaged	835 x 400 x 340mm (H x W x D)
Nett Weight	16 kg
Packaged Weight	16 kg

Packaging Details

Box Qty	1

Product Details

Country of Origin	United Kingdom
Product Material	Mdf Painted Matt
Colour/Finish	Gloss Grey
Mount Type	Floor
Style	Contemporary
Handle Type	Strap
Construction Method	Cam & Wood Dowel
Construction Type	Rigid
Fascia Finish	Mdf Painted Matt
Handles Included	Yes
No. Doors	1
No. Shelves	1
Number Of Shelves	1

© ROXOR Group