Sales Code: 237CAS182 **Barcode:** 5055369060115 **Brand:** Arley Pro **Description:** Arley Pro Cascade 2 1800 x 800mm Single Ended Bath

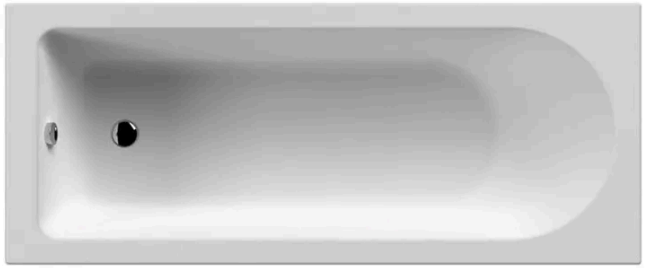

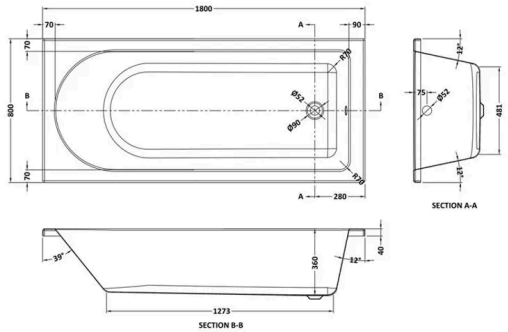

Product Dimensions

Product	360 x 800 x 1800mm (H x W x L)
Packaged	380 x 750 x 1800mm (H x W x D)
Nett Weight	23 kg
Packaged Weight	23 kg

Packaging Details

Box Qty	1

Product Details

Volume	230 Litre
Country of Origin	United Kingdom
Product Material	Acrylic
Colour/Finish	White
Style	Contemporary
Bath Panel Included	No
Ce Certified	Yes
Displaced Capacity	160 Litre
Hydrotherapy System	No
Includes Grips	No
No. Of Tapholes	No Tapholes
Overflow Included	Yes
Tap Included	No
Waste Included	No

© ROXOR Group