Sales Code: 237CAS162 **Barcode:** 5056474596674 **Brand:** Arley Pro **Description:** Arley Pro Cascade 2 1600 x 700mm Single Ended Bath

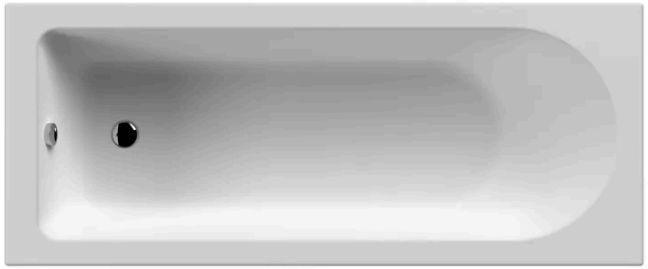

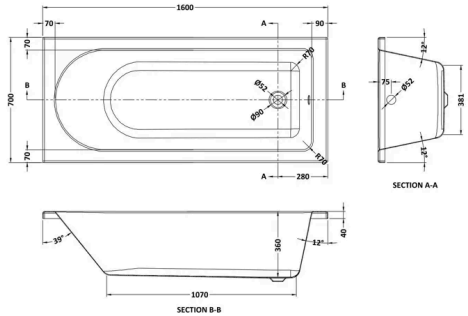

Product Dimensions

Product	360 x 700 x 1600mm (H x W x L)
Packaged	400 x 700 x 1600mm (H x W x D)
Nett Weight	16.2 kg
Packaged Weight	16.2 kg

Packaging Details

Box Qty	1
Label Size (mm)	50 x 100
Label Colour	White
Label Qty	2.0000

Product Details

Volume	168 Litre
Country of Origin	Egypt
Product Material	Acrylic
Colour/Finish	European White
Style	Contemporary
Bath Panel Included	No
Ce Certified	Yes
Displaced Capacity	98 Litre
Includes Grips	No
Leg Set Included	Yes
No. Of Tapholes	No Tapholes
Overflow Included	Yes
Tap Included	No
Waste Included	No
Waste Size Required	90mm

© ROXOR Group