Sales Code: 237CAS152 **Barcode:** 5056474560330 **Brand:** Arley Pro **Description:** Arley Pro Cascade 2 1500 x 700mm Single Ended Bath

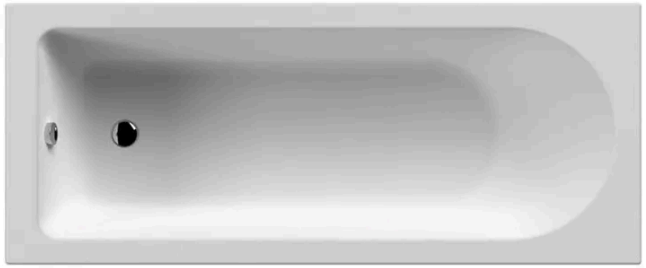

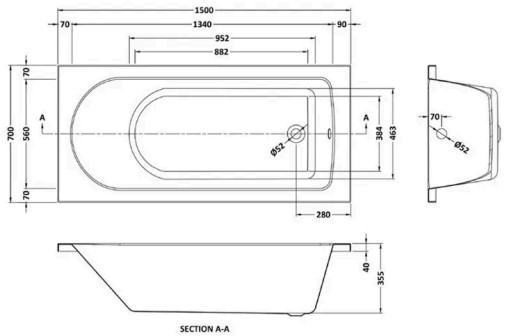

Product Dimensions

Product	355 x 700 x 1500 x 1500mm (H x W x D x L)
Packaged	400 x 715 x 1505mm (H x W x D)
Nett Weight	17 kg
Packaged Weight	17 kg

Packaging Details

Box Qty	1

Product Details

Volume	165 Litre
Country of Origin	United Kingdom
Product Material	Acrylic
Colour/Finish	White
Style	Contemporary
Bath Panel Included	No
Ce Certified	Yes
Displaced Capacity	95 Litre
Hydrotherapy System	No
Includes Grips	No
No. Of Tapholes	No Tapholes
Overflow Included	Yes
Tap Included	No
Waste Included	No

© ROXOR Group