Sales Code: 237BPLGW1800 **Barcode:** 5056883735688 **Brand:** Halite **Description:** Halite 1800mm L Shaped Front Bath Panel

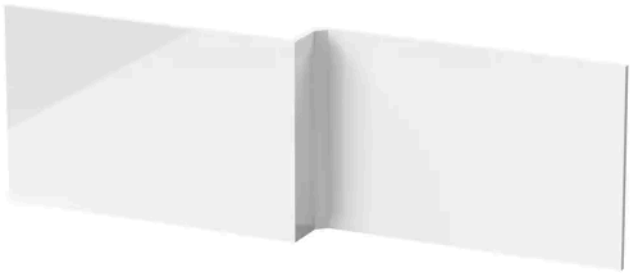

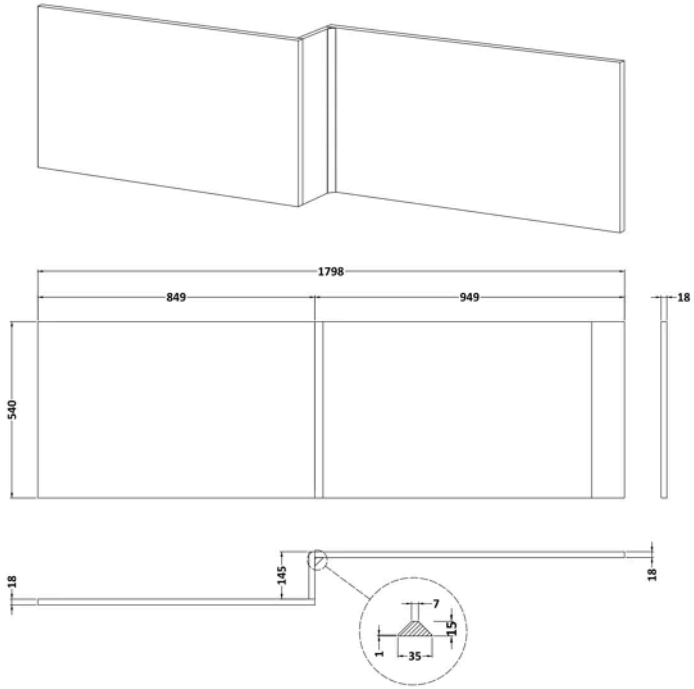

Product Dimensions

Product	540 x 1800 x 145mm (H x W x D)
Packaged	53 x 1050 x 560mm (H x W x D)
Nett Weight	13.8 kg
Packaged Weight	14.3 kg

Product Details

Country of Origin	China
Product Material	Polyurea,Pvc
Colour/Finish	Gloss White
Style	Contemporary
Fixings Included	Yes
Bath Panel Shape	Square
Bath Panel Type	Front Panel
Material Thickness	16 mm

© ROXOR Group