Sales Code: 237BLA17 **Barcode:** 5056474565298 **Brand:** Arley Pro **Description:** Arley Pro Blanc 1700mm Square Single Ended Bath

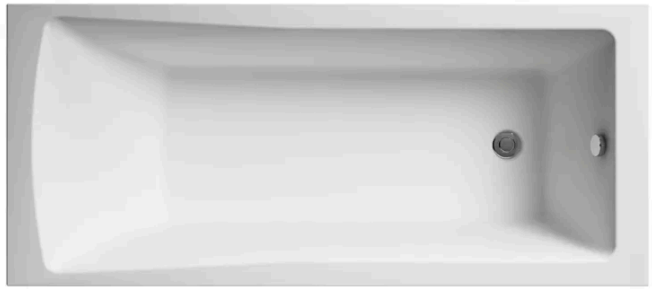

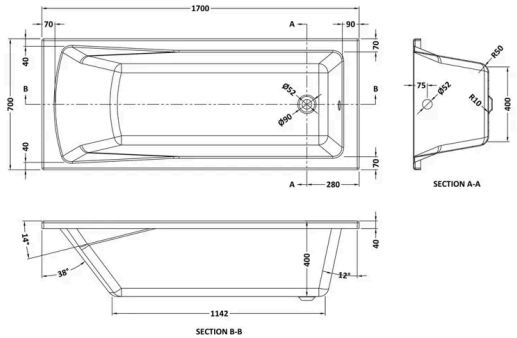

Product Dimensions

Product	400 x 700 x 1700mm (H x W x L)
Packaged	420 x 700 x 1700mm (H x W x D)
Nett Weight	20 kg
Packaged Weight	20 kg

Packaging Details

Box Qty	1

Product Details

Volume	178 Litre
Country of Origin	United Kingdom
Product Material	Acrylic
Colour/Finish	White
Style	Contemporary
Bath Panel Included	No
Ce Certified	Yes
Displaced Capacity	108 Litre
Hydrotherapy System	No
Includes Grips	No
No. Of Tapholes	No Tapholes
Overflow Included	Yes
Tap Included	No
Waste Included	No

© ROXOR Group