Sales Code: 23718A **Barcode:** 5056474596025 **Brand:** Arley Pro **Description:** Arley Pro Biab Round Back to Wall Toilet Pan With Seat



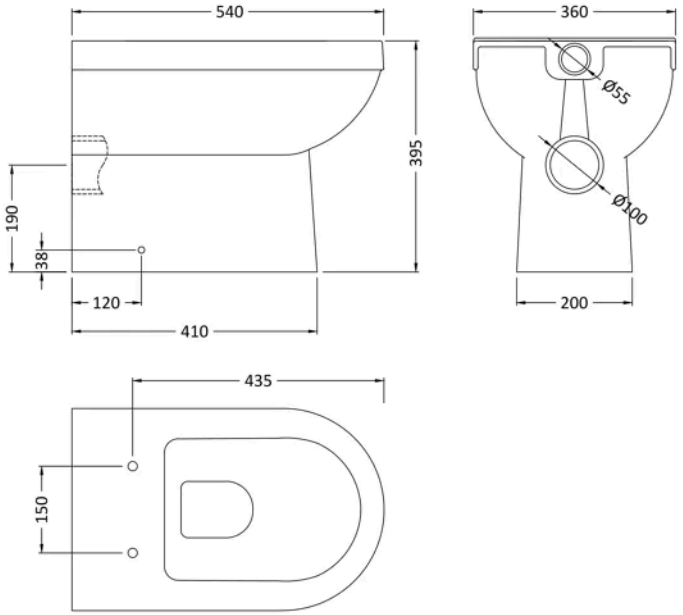

Product Dimensions

Product	395 x 360 x 540mm (H x W x D)
Packaged	450 x 375 x 560mm (H x W x D)
Nett Weight	26.76 kg
Packaged Weight	26.76 kg

Product Details

Country of Origin	China
Product Material	Urea,Vitreous China
Colour/Finish	White
Style	Contemporary
Ce Certified	Yes
Hinge Centres (Max)	190 mm
Hinge Centres (Min)	90 mm
Includes Seat	Yes
Pan Type	Back To Wall
Toilet Seat Type	D Shape

© ROXOR Group

Sales Code: 23718 **Barcode:** 5056474595936 **Brand:** Arley Pro **Description:** Missing Title



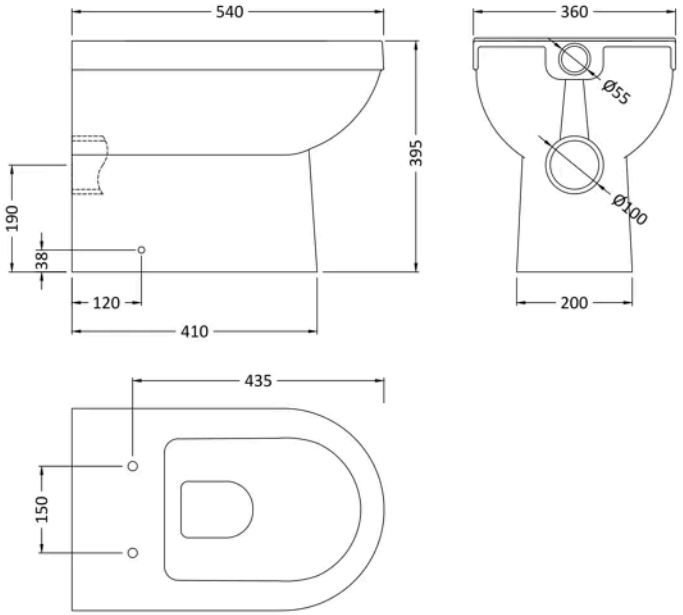

Product Dimensions

Product	395 x 360 x 540mm (H x W x D)
Packaged	450 x 375 x 560mm (H x W x D)
Nett Weight	24 kg
Packaged Weight	24.5 kg

Product Details

Country of Origin	China
Product Material	Vitreous China
Colour/Finish	White
Style	Contemporary
Ce Certified	Yes
Includes Seat	No
Pan Type	Back To Wall

© ROXOR Group

Sales Code: 237SEAT **Barcode:** 5056474595943 **Brand:** Arley Pro **Description:** BIAB soft close seat



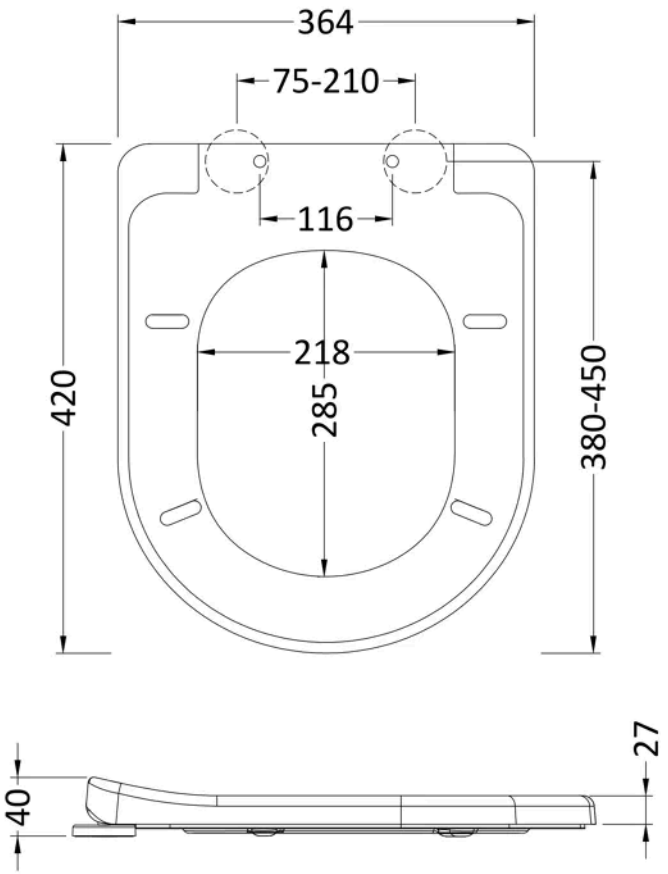

Product Dimensions

Product	40 x 364 x 420mm (H x W x D)
Packaged	55 x 380 x 455mm (H x W x D)
Outer Box	320mm (H)
Nett Weight	2 kg
Packaged Weight	2.26 kg

Packaging Details

Label Size (mm)	50 x 100
Label Qty	2.0000

Product Details

Country of Origin	China
Product Material	Polypropylene,Urea
Colour/Finish	White
Style	Contemporary
Fixings Included	Yes
Ce Certified	No
Declaration Of Performance	No
Hinge Centres (Max)	210 mm
Hinge Centres (Min)	75 mm
Toilet Seat Function	Soft Close
Toilet Seat Hinge Type	Quick Release
Toilet Seat Type	D Shape

© ROXOR Group