Sales Code: 23708TA **Barcode:** 5056474596070 **Brand:** Arley Pro **Description:** Arley Pro Biab Round Back to Wall Round Toilet Pan With Seat



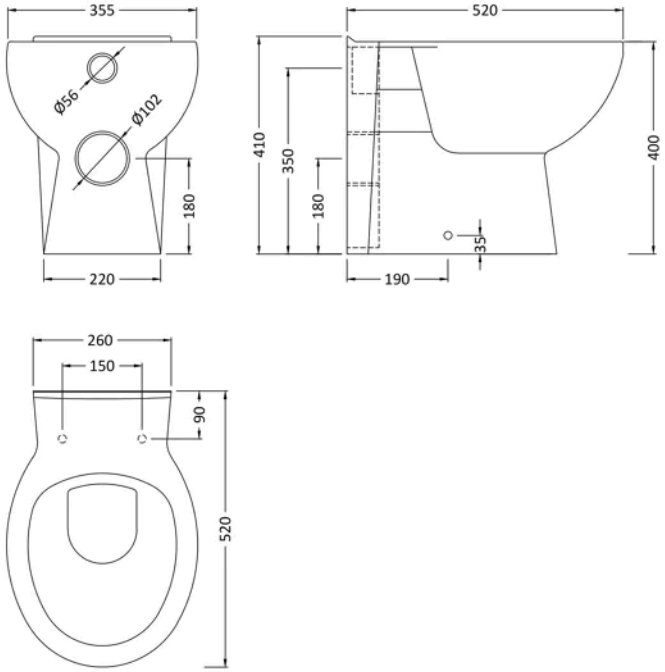

Product Dimensions

Product	410 x 355 x 520mm (H x W x D)
Packaged	420 x 395 x 555mm (H x W x D)
Nett Weight	18.5 kg
Packaged Weight	19 kg

Product Details

Country of Origin	China
Product Material	Vitreous China
Colour/Finish	White
Style	Contemporary
Ce Certified	Yes
Hinge Centres (Max)	180 mm
Hinge Centres (Min)	120 mm
Includes Seat	Yes
Pan Type	Back To Wall
Toilet Seat Type	Round

© ROXOR Group

Sales Code: 23708T **Barcode:** 5056474596049 **Brand:** Arley Pro **Description:** Trade BTW Pan c/w SC Seat



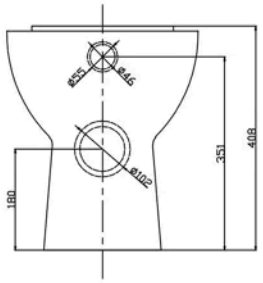

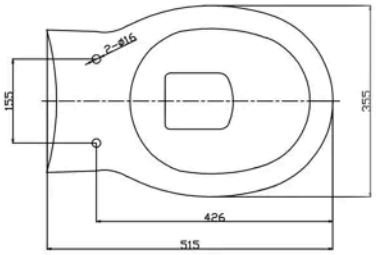

Product Dimensions

Product	408 x 515 x 355mm (H x W x D)
Nett Weight	22 kg
Packaged Weight	22 kg

Product Details

Country of Origin	United Kingdom
Product Material	Vitreous China
Colour/Finish	White
Style	Contemporary

© ROXOR Group

Sales Code: 237SEATT **Barcode:** 5056474596063 **Brand:** Arley Pro **Description:** BIAB Trade soft close seat



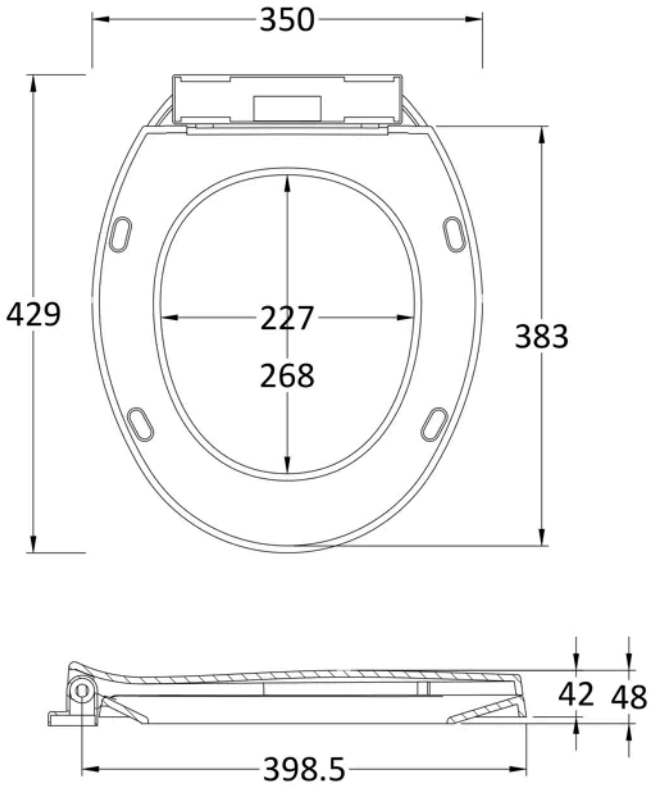

Product Dimensions

Product	50 x 350 x 420mm (H x W x D)
Packaged	70 x 350 x 440mm (H x W x D)
Outer Box	400mm (H)
Nett Weight	1.2 kg
Packaged Weight	1.42 kg

Packaging Details

Label Size (mm)	50 x 100

Product Details

Country of Origin	China
Product Material	Polypropylene
Colour/Finish	White
Style	Contemporary
Fixings Included	Yes
Ce Certified	No
Declaration Of Performance	No
Hinge Centres (Max)	180 mm
Hinge Centres (Min)	120 mm
Toilet Seat Function	Soft Close
Toilet Seat Hinge Type	Bottom Fix
Toilet Seat Type	Round

© ROXOR Group