Sales Code: 237021T **Barcode:** 5056474596094 **Brand:** Arley Pro **Description:** Arley Pro Biab Trade 550mm 1 Tap Hole Ceramic Basin & Pedestal



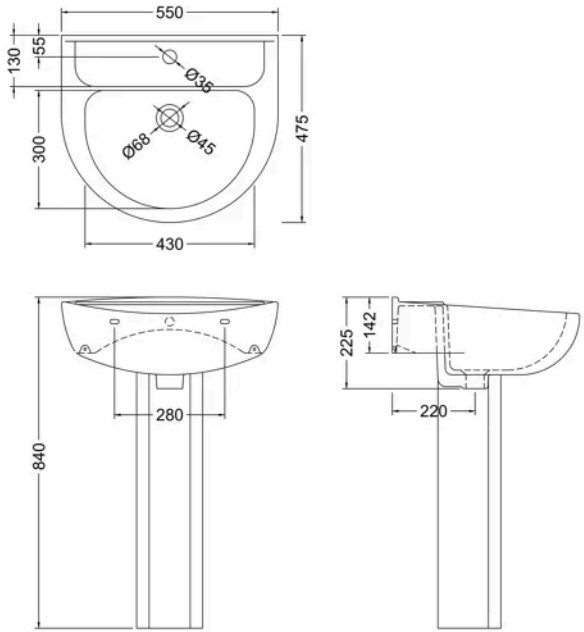

Product Dimensions

Product	840 x 550 x 475mm (H x W x D)
Packaged	550 x 550 x 550mm (H x W x D)
Nett Weight	24.4 kg
Packaged Weight	24.4 kg

Packaging Details

Box Qty	2

Product Details

Country of Origin	China
Product Material	Vitreous China
Colour/Finish	White
Mount Type	Floor
Style	Contemporary
Fixings Included	No
Ce Certified	Yes
Inner Bowl Depth	285 mm
Inner Bowl Height	170 mm
Inner Bowl Width	555 mm
No. Of Tapholes	1
Number Of Bowls	1
Overflow Cover Included	No
Overflow Included	Yes
Tap Included	No
Waste Included	No

© ROXOR Group

Sales Code: 237501TH **Barcode:** 5056474596513 **Brand:** Arley Pro **Description:** Missing Title



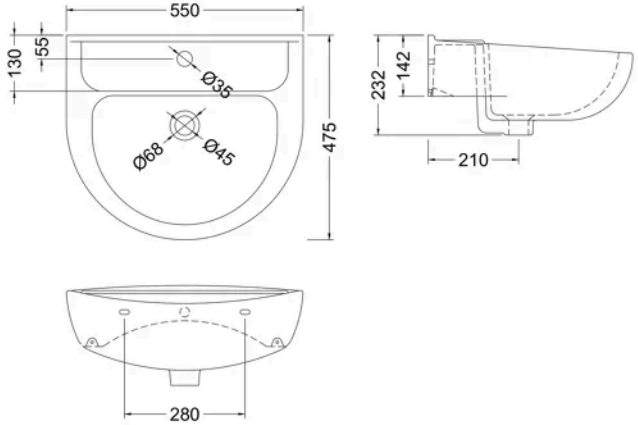

Product Dimensions

Product	232 x 550 x 475mm (H x W x D)
Packaged	245 x 570 x 485mm (H x W x D)
Nett Weight	12.5 kg
Packaged Weight	12.7 kg

Packaging Details

Box Qty	1

Product Details

Country of Origin	China
Product Material	Vitreous China
Colour/Finish	White
Ce Certified	Yes
Inner Bowl Height	170 mm
No. Of Tapholes	1
Number Of Bowls	1

© ROXOR Group

Sales Code: 237BIABPED **Barcode:** 5056474596520 **Brand:** Arley Pro **Description:** Missing Title



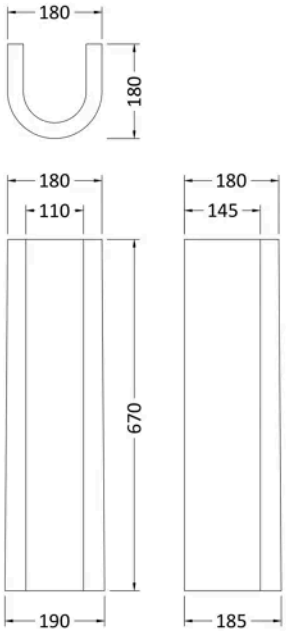

Product Dimensions

Product	670 x 180 x 180mm (H x W x D)
Packaged	710 x 190 x 190mm (H x W x D)
Nett Weight	11.5 kg
Packaged Weight	11.7 kg

Packaging Details

Box Qty	1

Product Details

Country of Origin	China
Product Material	Vitreous China
Colour/Finish	White
Ce Certified	Yes

© ROXOR Group