Sales Code: 199/000SG **Barcode:** 5056817797638 **Brand:** Arley Pro **Description:** Offset Quads Leg & Panel Pack - Slate Grey



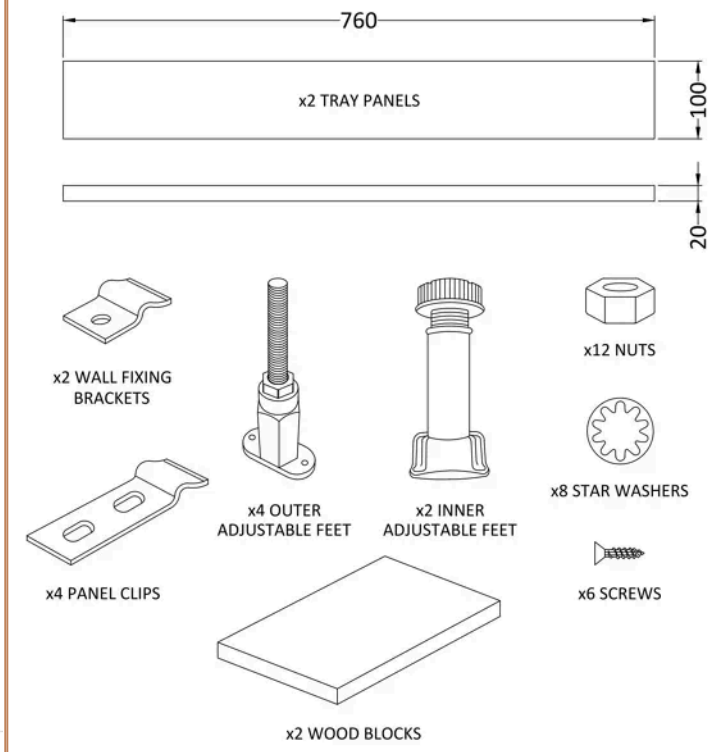

Product Dimensions

Packaged	110 x 523 x 1530mm (H x W x D)
Nett Weight	2.2 kg
Packaged Weight	2.2 kg

Packaging Details

Box Qty	1

Product Details

Country of Origin	United Kingdom
Product Material	Acrylic
Colour/Finish	Slate Grey
Style	Contemporary

© ROXOR Group