**Sales Code:** 153AT902-N **Barcode:** 5056474562594 **Brand:** Arley Pro **Description:** Arley Pro Comfort White Cushioned Back Rest



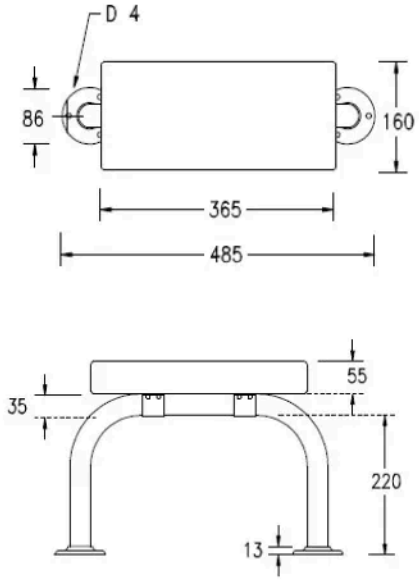


## Product Dimensions

| | |
|---|---|
| Product | 160 x 485 x 306mm (H x W x D) |
| Packaged | 410 x 375 x 510mm (H x W x D) |
| Nett Weight | 1.5 kg |
| Packaged Weight | 1.5 kg |

## Product Details

| | |
|---|---|
| Country of Origin | United Kingdom |
| Product Material | Steel |
| Colour/Finish | White |
| Style | Contemporary |

© ROXOR Group