Sales Code: 00795901210

Barcode: 3247230102105

Brand: Siamp

Description: Siamp Mougins White Round Soft Close Toilet Seat With Stainless Steel Bottom Fix Hinge



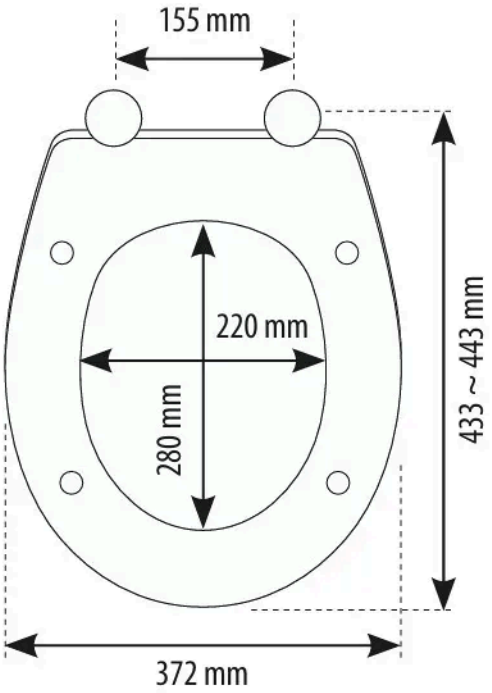

Product Dimensions

Product	44 x 372mm (H x W)
Packaged	465 x 55 x 385mm (H x W x D)
Nett Weight	1.9 kg
Packaged Weight	1.9 kg

Packaging Details

Box Qty	1

Product Details

Country of Origin	United Kingdom
Product Material	Thermoset
Colour/Finish	White
Style	Contemporary
Toilet Seat Function	Soft Close
Toilet Seat Hinge Material	Stainless Steel
Toilet Seat Hinge Type	Bottom Fix
Toilet Seat Type	Round

© ROXOR Group