Ultra Finishing Assembly Instruction

Triple Exposed Shower with Bath Spout

1. Tools needed. (a) Adjustable spanner. (b) 12mm Allen key. (c) 2.5mm Allen key (supplied)

2. Component overview. (a) Exposed Twin Body. (b) Stop cock. (c) Spout.

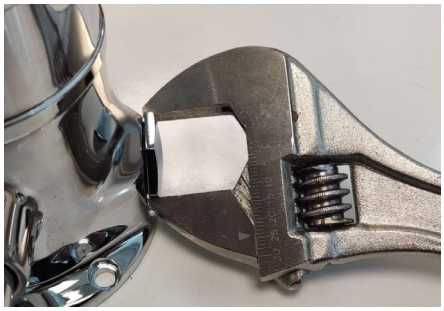

3. Using the adjustable spanner, carefully remove and discard the hex blanking nut from the exposed shower body.

4. Use the 2.5mm Allen key to loosen the grub screw on the stop cock and remove the spigot.

5. ***Tip. If the spigot is stiff to remove, use the shower body as an anchor by partially screwing the spigot into the shower body and gently pulling the stop cock.***

6. Use the 12mm Allen key to tighten the spigot into the shower body.

7. ***Tip. If you do not have a 12mm Allen key, an 8mm and 4mm used together work just as well.***

8. Now push the stop cock onto the spigot and tighten the grub screw using the 2.5mm Allen key.

9. Remove and discard the adaptor from the stop cock.

10. Use the 2.5mm Allen key to loosen the grub screw on the spout.

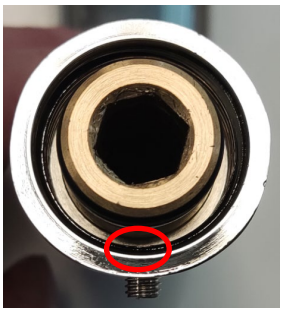

11. Check that the point of the grub screw is not protruding in the threaded area, as this may foul on the threaded part of the spigot.

12. Now screw the spout clockwise onto the thread of the stop cock. If the spout is not correctly aligned when it reaches the end of the thread, it can be slightly unscrewed to line up. Once done, tighten the grub screw.
Assembly complete.

GENERAL FITTING GUIDE for TRADITIONAL RISER KITS

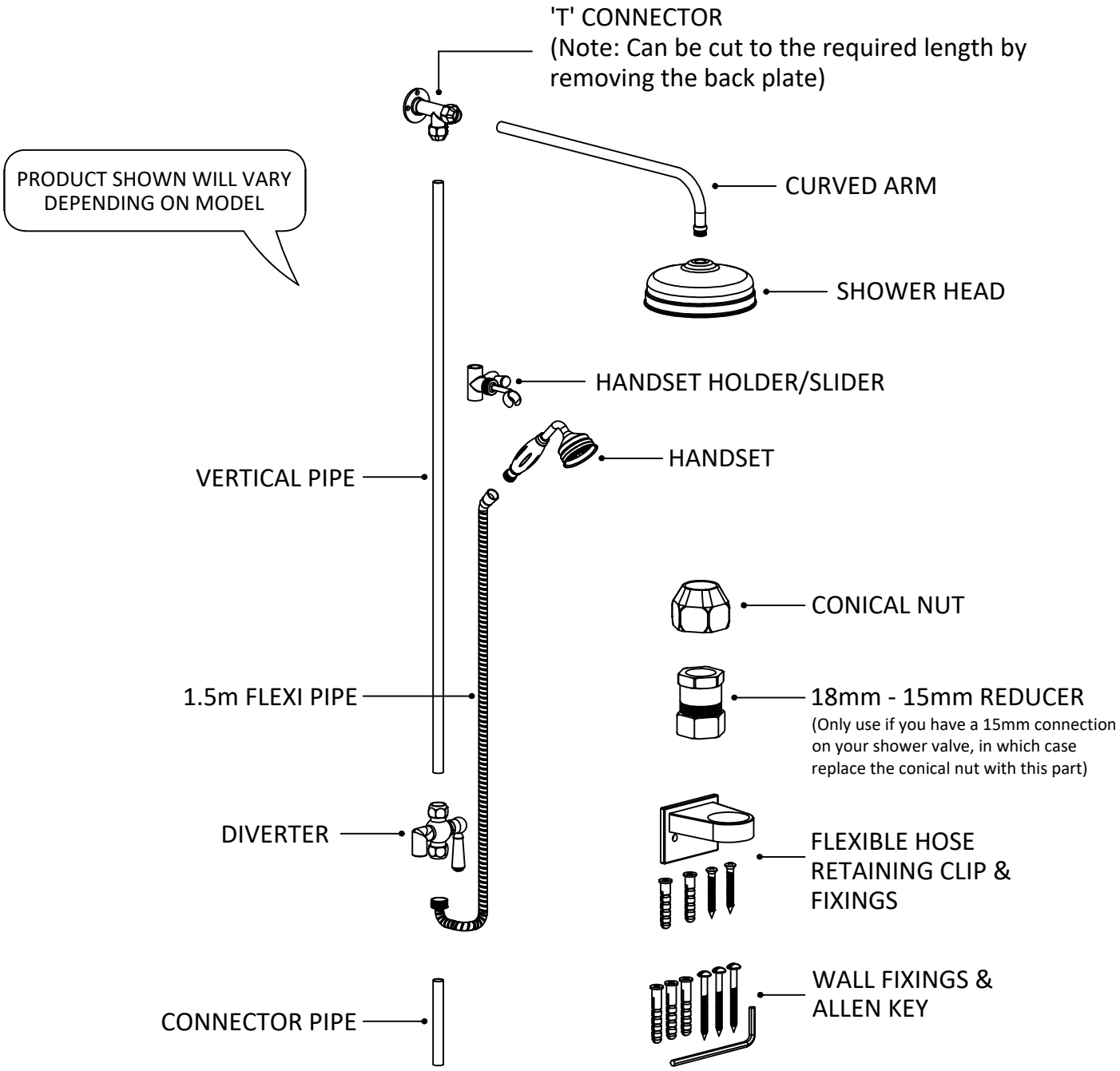

GUARANTEE & AFTERCARE

When installing or using tools, extra care must be taken to avoid damaging the finish or fitting. To maintain the appearance, please ensure it is cleaned regularly using a clean soft damp cloth only. Abrasive cleaners or detergents must not be used as they may cause surface deterioration. The company provides a guarantee against faulty material or manufacture excluding serviceable parts, providing they have been installed, cared for and used in accordance with our instructions.

The company reserves the right to continually evolve its product lines without notification. The company will not accept any liability regarding specification changes and their consequences unless previously quoted by the company in writing.

TWIN & TRIPLE CONTROL EXPOSED THERMOSTATIC SHOWER VALVES

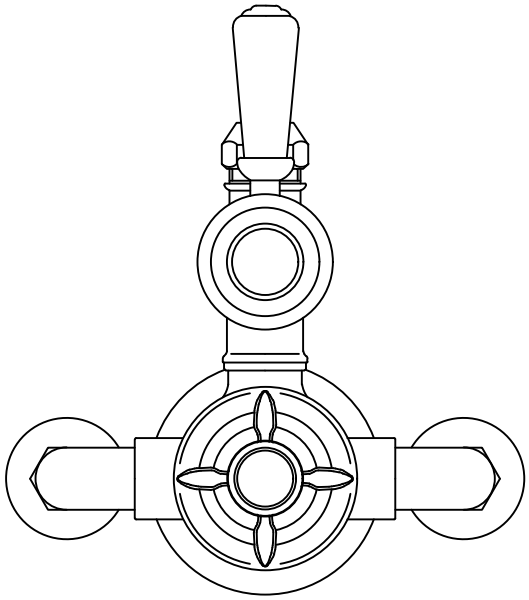

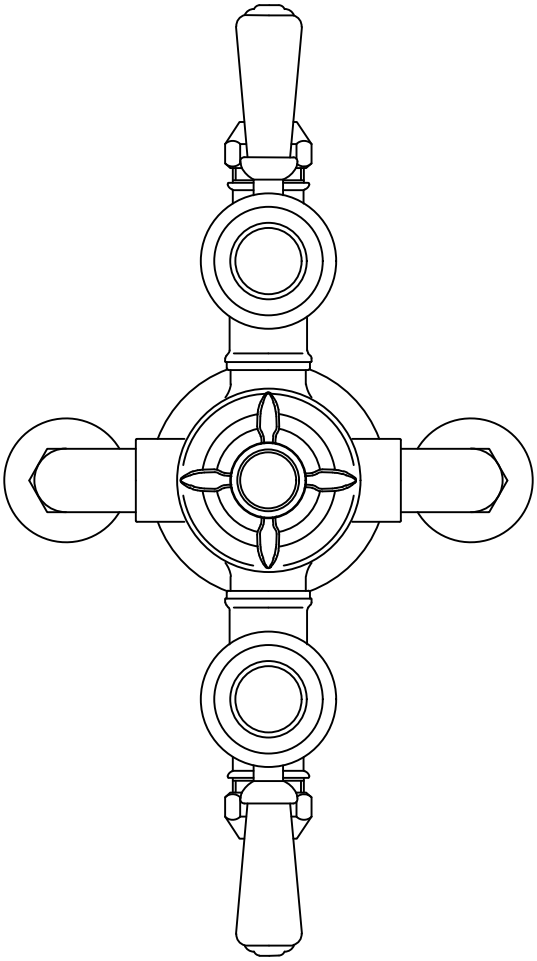

Please leave this installation & user guide with the end user.

Contents

1.	Introduction & Safety	Page 2
2.	Technical Data	Page 2
3.	Dimensions	Page 3
4.	Components	Page 4
5.	Cartridge Reversal	Page 5
6.	Installation	Page 5
7.	Temperature Adjustment	Page 6
8.	Aftercare	Page 6
9.	Conditions of Use & Commissioning	Page6
10.	Fault diagnosis	Page 7

Important Information

This installation guide is for the Twin & Triple Exposed Thermostatic Shower valves
It covers the installation, maintenance and operation of the Shower Valve.

The Twin & Triple exposed valves are thermostatically regulated by a wax element. It is designed to provide a flow of water at a safe temperature when installed as described in this manual. The valve is suitable for both low and high pressure installations. The valve is also suitable, without modification, for all types of installation, including pumped gravity systems, mains pressure and combination boilers.

Safety

We recommend that this product is fitted by a fully qualified installer. The installation must comply with all current water regulations.

Please note: This valve MUST be commissioned on site to suit site conditions.

In order for this product to operate as designed it must be installed, commissioned and maintained as stated in this manual.

Technical Data
For Conditions of use see Page 6

Max Dynamic Pressure: 5 bar
Min Dynamic Pressure: 0.1 bar
Factory Outlet Temperature Setting: 43°C
Minimum Temperature Differential (Mixed water to hot water): 10°C
Temperature Stability: ±2°C

The valve is suitable, without modification, for all types of installation, including pumped gravity systems, mains pressure and combination boilers.

Twin & Triple Valve
The hot inlet of the valve must be connected to the hot pipe work. The hot inlet of the valve will be marked.

Line drawing - Twin Valve

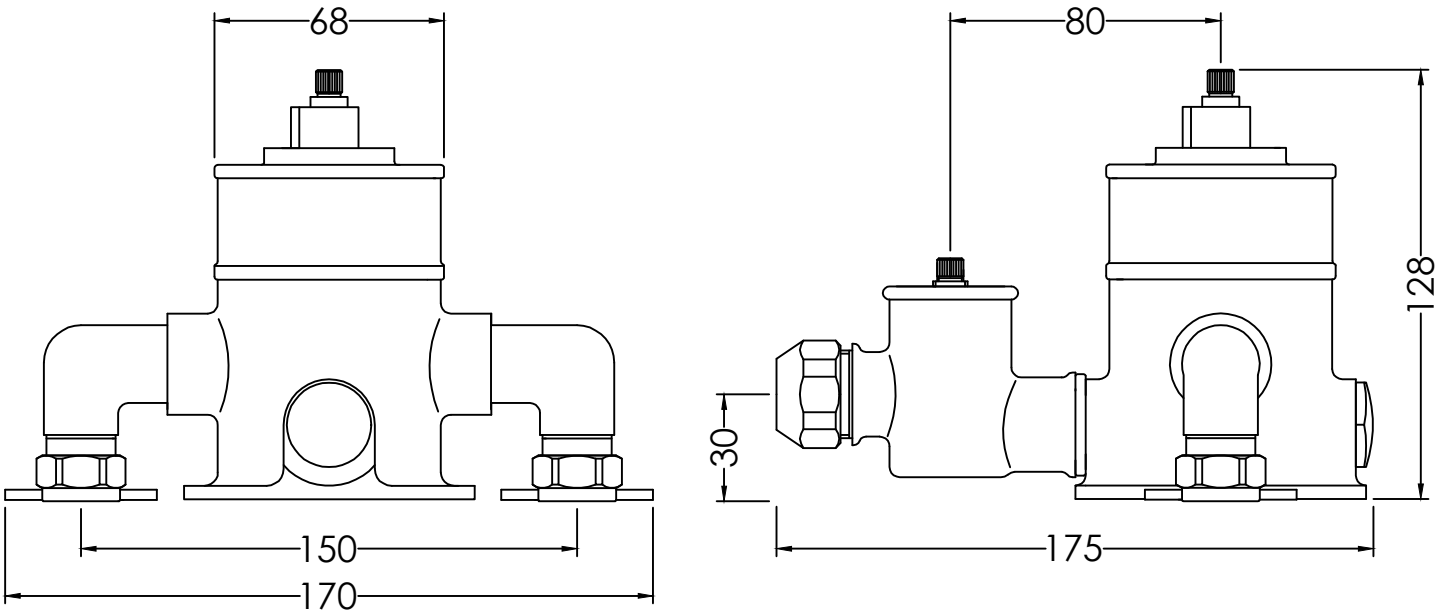

Line drawing - Triple Valve

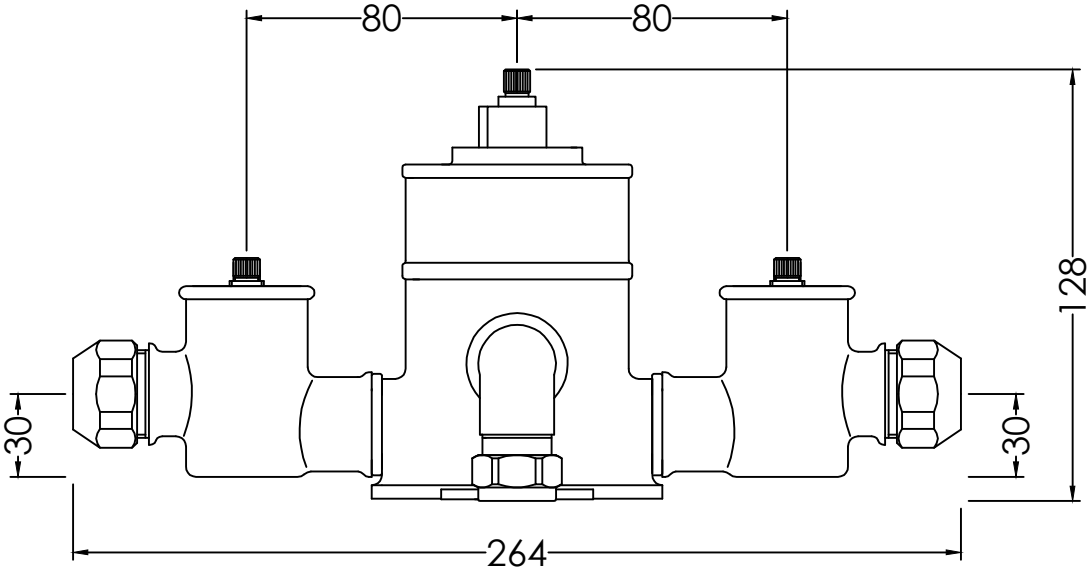

Componets	
1	Decorative Cover
2	'O' Ring
3	Cartridge Retaining Collar
4	Thermostatic Cartridge Spindle
5	Thermostatic Cartridge
6	Shower Body
7	Blanking Plug
8	Wall Fixing Screws
9	Inlet Elbow Inc' Mesh Filter
10	Check Valve
11	Olive
12	15mm Compression Nut
13	Elbow Concealing Flange
14	Wall Plug
15	Fixing Hole
16	Bayonet
17	Grub Screw
18	Outlet Connecting Nut
19	Flow Control Body
20	CD Valve

Hose Adaptor
To be used if a flexible hose connection is required

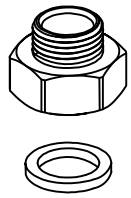

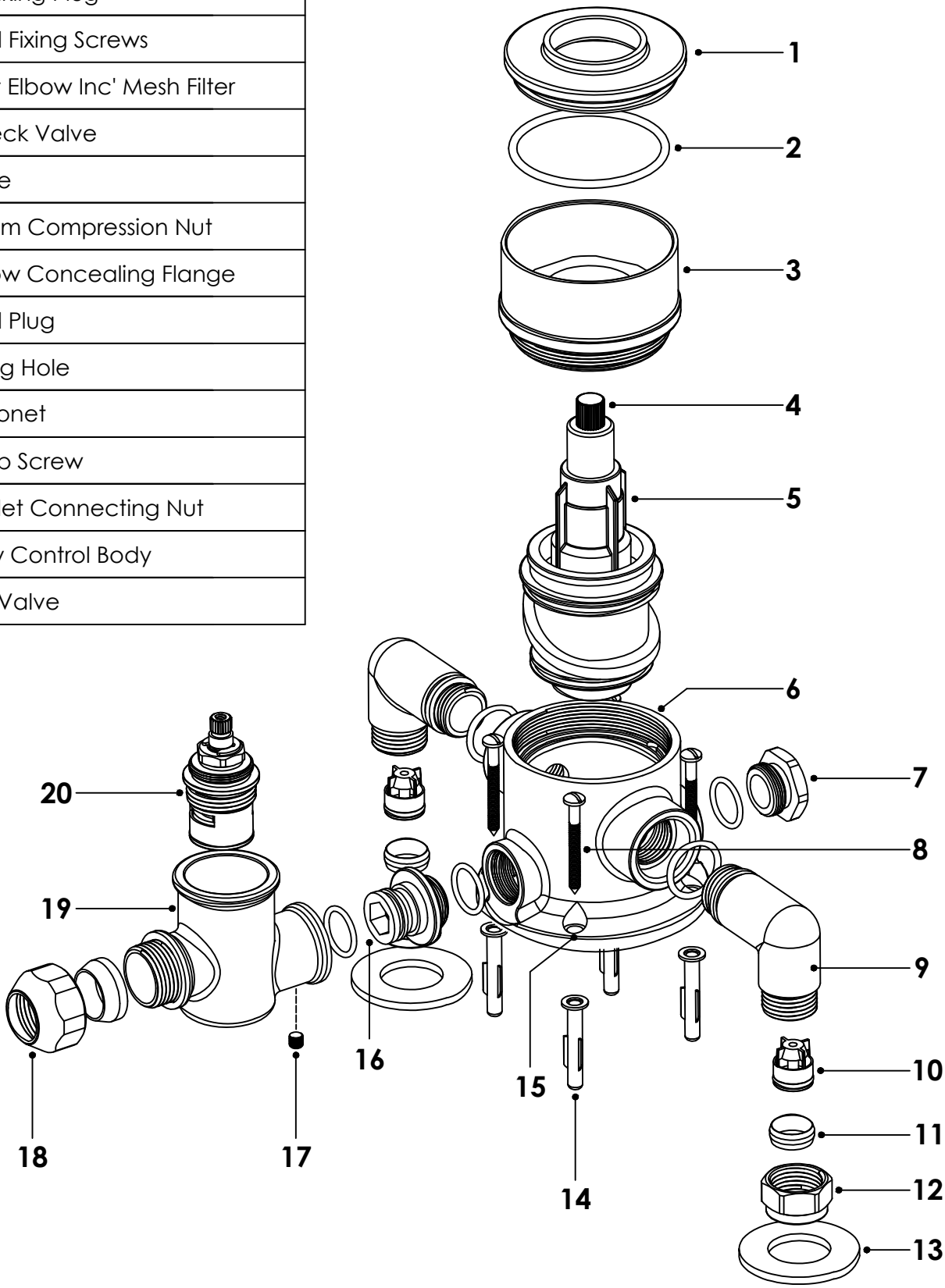

Cartridge Reversal

Please note that the pipework on site should be plumbed with the hot on the left and the cold on the right as you look at it. If this is not the case, instead of turning the valve body around to match the pipe work, the cartridge can be taken out of the valve body, turned 180° and placed back in the valve body. The Hot & Cold inlets will now match the incoming water.

When removing the cartridge, please undo the cartridge retaining collar and then pull gently on the cartridge.
There may be some residual water behind the cartridge. Remove the cartridge from the valve body and turn it 180° so that the positional lug on the cartridge lines up with the slot in the valve body.
Push the cartridge into the valve body making sure the lug is in the slot. Replace the cartridge retaining collar being careful not to over tighten.

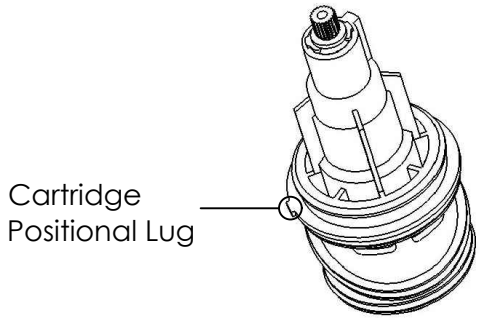

Installation

1. Before installation, please read the Conditions of Use & Commissioning section (depending on installation type) and ensure the system supply conditions comply.

2. You must install accessible isolation valves in the HOT & COLD water supply lines for servicing purposes.

3. The plumbing inlet connections are 15mm compression.

4. Determine the fixing position for the valve.

5. Screw the shower valve body in position, using the fixing holes that are cast into the base of the body.

6. Now the shower valve body is securely mounted onto the wall, make sure the pipe work is thoroughly flushed through to remove any debris from the system before connecting the water supplies.
   Failure to do this could invalidate the guarantee.

7. The plumbing connections should then be made to the HOT & COLD water inlets (which are clearly marked). **If for some reason the pipe work feeds on site are the wrong way around, the cartridge can be taken out of the valve body, turned 180° and placed back in the valve body.**

8. Make the plumbing connection to the water outlet. This will take the water to the chosen auxiliary product (shower kit) you have selected to run with this shower.

9. Turn on the water supply and check for leaks.

10. Check the max water temperature from the terminal fitting with a thermometer. The recommended maximum terminal outlet temperature is 41°C. If the water temperature is not suitable please see the Temperature Adjustment Section.
    Please Note: The mixed water temperature at the terminal fitting must never exceed 46°C.

11. The valve can now be commissioned. Depending on the valves application, please see the Conditions of Use & Commissioning sections for commissioning.

12. Apply a small bead of silicone behind both chrome elbow concealing flanges (this will give a water tight seal so water cannot ingress into the wall cavity).

13. Fit the chrome control handles. The thermostatic control handle is clearly marked with H & C.
    Your shower valve is now ready for use.

Temperature Adjustment

1. Remove the handle on the thermostat control. The spline will now be exposed.

2. Turn the shower flow control fully on.

3. If the shower is too cold then turn the spline anti-clockwise. If the shower is too hot then turn the spline clockwise. Let the water temperature stabilise after every adjustment.
   We recommend a max temperature of 41°C.
   The mixed water temperature at the terminal fitting must never exceed 46°C.

4. When the temperature is correct turn the flow control off. Do not move the spline again until after the handle is secured in place. The max temperature is now set and any movement of the spline will alter the temperature.

5. The handle can now be put back in place. **When the handle is being placed over the spline, please ensure that the handle Stop Lug is against the cartridge Stop Lug preventing the handle from being turned any further anti clockwise. This prevents the shower valve from reaching a temperature that is higher than the set point.**
   Please see the diagram below.

6. The handle can now be fixed in place. The shower should have a safe maximum showering temperature.

Cartridge Stop Lug
The handle stop lug should be against this face at the maximum temperature setting. This stops further anti-clockwise movement.

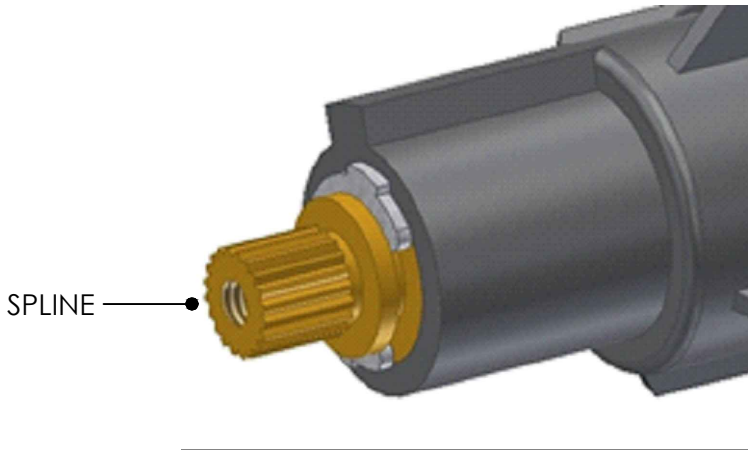

Aftercare

- When cleaning the valve please do not use a substance that could possibly damage the surface finish. We recommend that soapy water with a mild detergent is used.

- Please take care not to damage the surface finish of the valve. The finish is polished chrome and can be easily marked.

Conditions of Use & Commissioning

	High Pressure	Low Pressure
Maximum Static Pressure - Bar	10	10
Flow Pressure, Hot & Cold - Bar	1 to 5	0.1 to 1
Hot Supply Temperature - °C	55 to 65	55 to 65
Cold Supply Temperature - °C	Equal to or less than 25°	Equal to or less than 25°

Recommended Outlet Temperatures

The mixed water temperatures must never exceed 46°C.

Note:

46°C is the maximum mixed water temperature from the bath tap. The maximum temperature takes account of the allowable temperature tolerances inherent in thermostatic mixing valves and temperature losses in metal baths. It is not a safe bathing temperature for adults or children. The British Burns Association recommends 37 to 37.5°C as a comfortable bathing temperature for children. In premises covered by the Care Standards Act 2000, the maximum mixed water outlet temperature is 43°C for showers.

The thermostatic mixing valve will be installed in such a position that maintenance of the TMV and its valves and the commissioning and testing of the TMV can be undertaken.

The fitting of isolation valves is required as close as is practicable to the water supply inlets of the thermostatic mixing valve.

Commissioning notes for Thermostatic Mixing Valves.

The first step in commissioning a thermostatic mixing valve is to check the following:

1. The designation of the thermostatic mixing valve matches the application.
2. The supply pressures are within the valves operating range.
3. The supply temperatures are within the valves operating range.
4. Isolating valves (and strainers preferred) are provided.
5. If all these conditions are met, proceed to set the temperature as stipulated in the manufacturer installation instructions.

Fault Diagnosis

Fault	Possible Cause
After Installation, shower only runs HOT or COLD	1. Hot & Cold water supplies are plumbed to the wrong sides of the valve. The cartridge can be removed from the body, turned 180° and placed back in the body.
Shower will not run hot enough when first installed.	1. Check HOT water supply temperature. 2. Maximum temperature needs adjusting. See Temperature Adjustment section. 3. Operating conditions are incorrect. 4. Blockage in hot side of the system.
Hot water in cold & vice versa	1. Check and clean the check valves, as they may be obstructed.
Low or no flow from the valve	1. Possible blockage in the system. 2. Operating conditions are incorrect. 3. Valve being obstructed by debris. 4. Valve shut off has activated due to Operating Conditions.
Leak from valve in the off position	1. Debris has gotten into the CD valve.
Fluctuating flow rate	1. Possible blockage in the system. 2. Operating conditions are incorrect. 3. Dynamic inlet pressures are not balanced. 4. Shuttle assembly is faulty.