ELEMENTA
BATH LEG FIXING INSTRUCTION

1

Preparation: Turn the bath upside down on a protective surface, like a soft mat or towel, to avoid scratching the enamel.

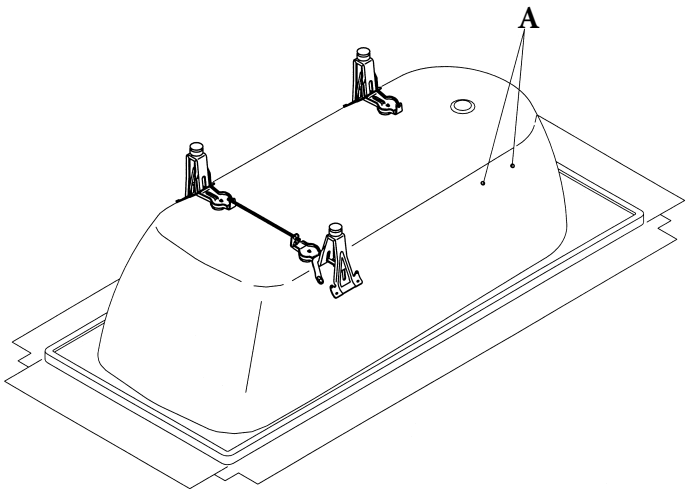

2

Attachment: Locate the metal lugs (A) welded to the underside of the bath. Slide the upper metal brackets of the leg assembly onto these lugs.
Initial Securing: Tighten the central bolt and nut assembly enough to keep the leg from falling off, but leave it loose enough for final positioning.

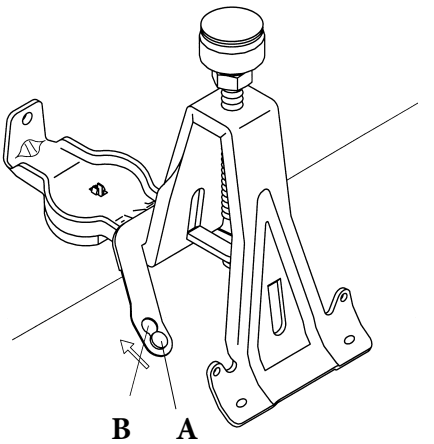

3

Use threaded rod (c) to connect the feet, and tighten by hand.

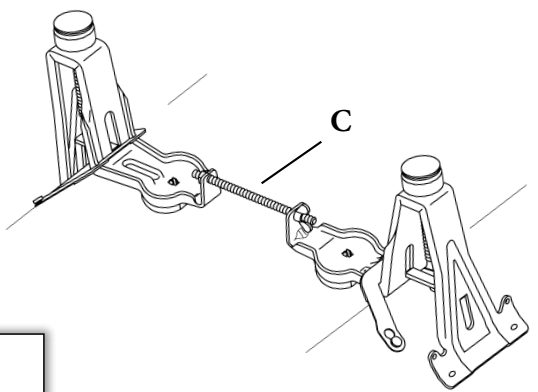

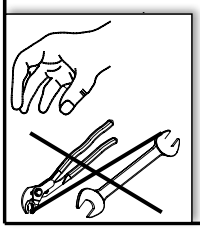

4

Height Adjustment: Once all four legs are attached, turn the bath upright and place it in position. Screw the blue plastic feet in or out to level the bath.
Final Levelling: Use a spirit level along the top edges of the bath. Once perfectly level, fully tighten the locking nuts on each leg to secure the height.
Floor Fixing (Optional): For extra stability, the feet can be screwed directly to the floor.

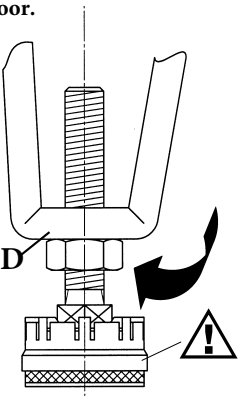

07-04-2026